PARTS MANUAL

Front Load Washing Machine

HWF80BW2 HA AA

Product Code
61398-A

AU NZ

Haier

TOP DECK & CONTROL COMPONENTS

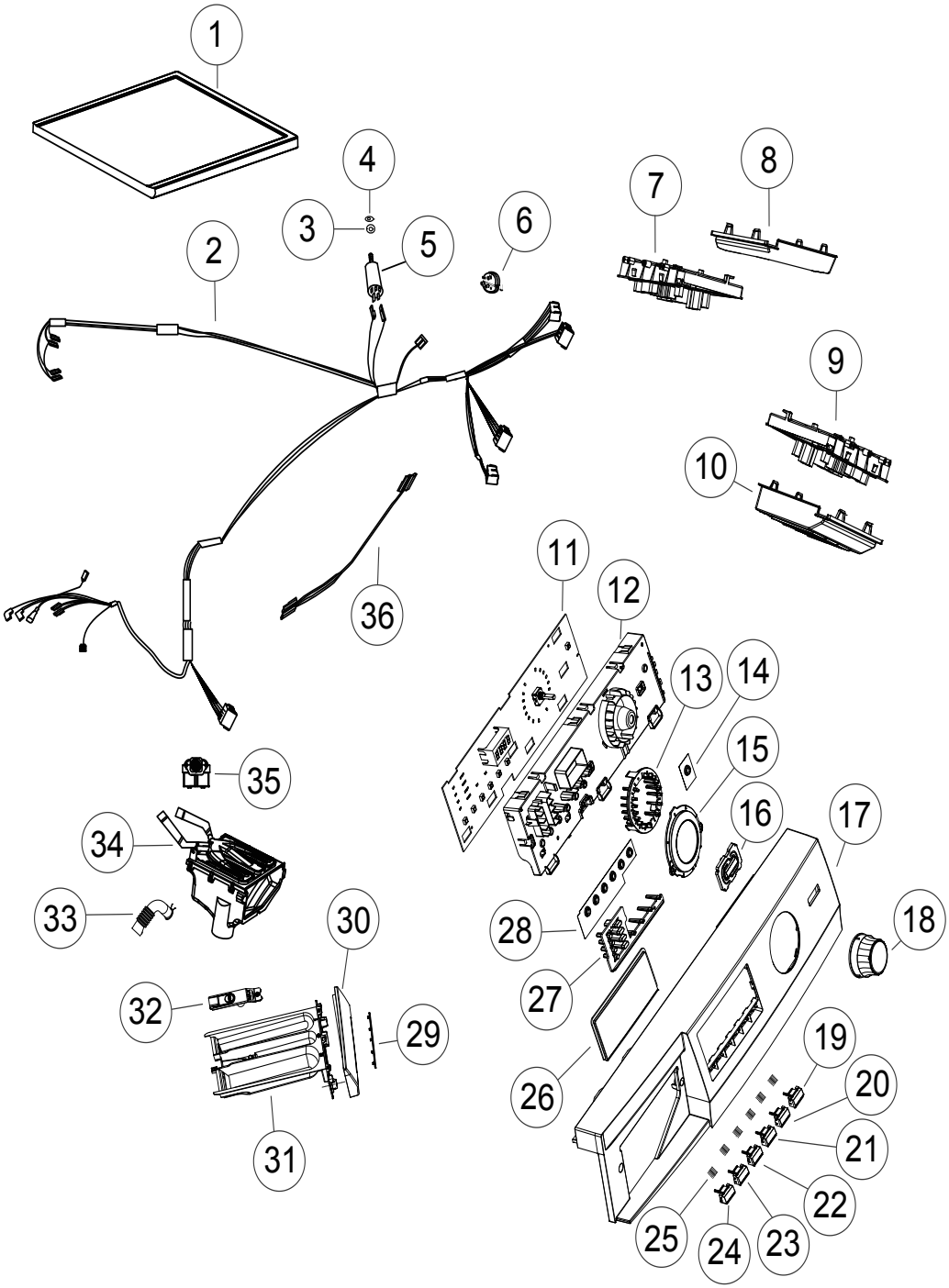

DWG 005232

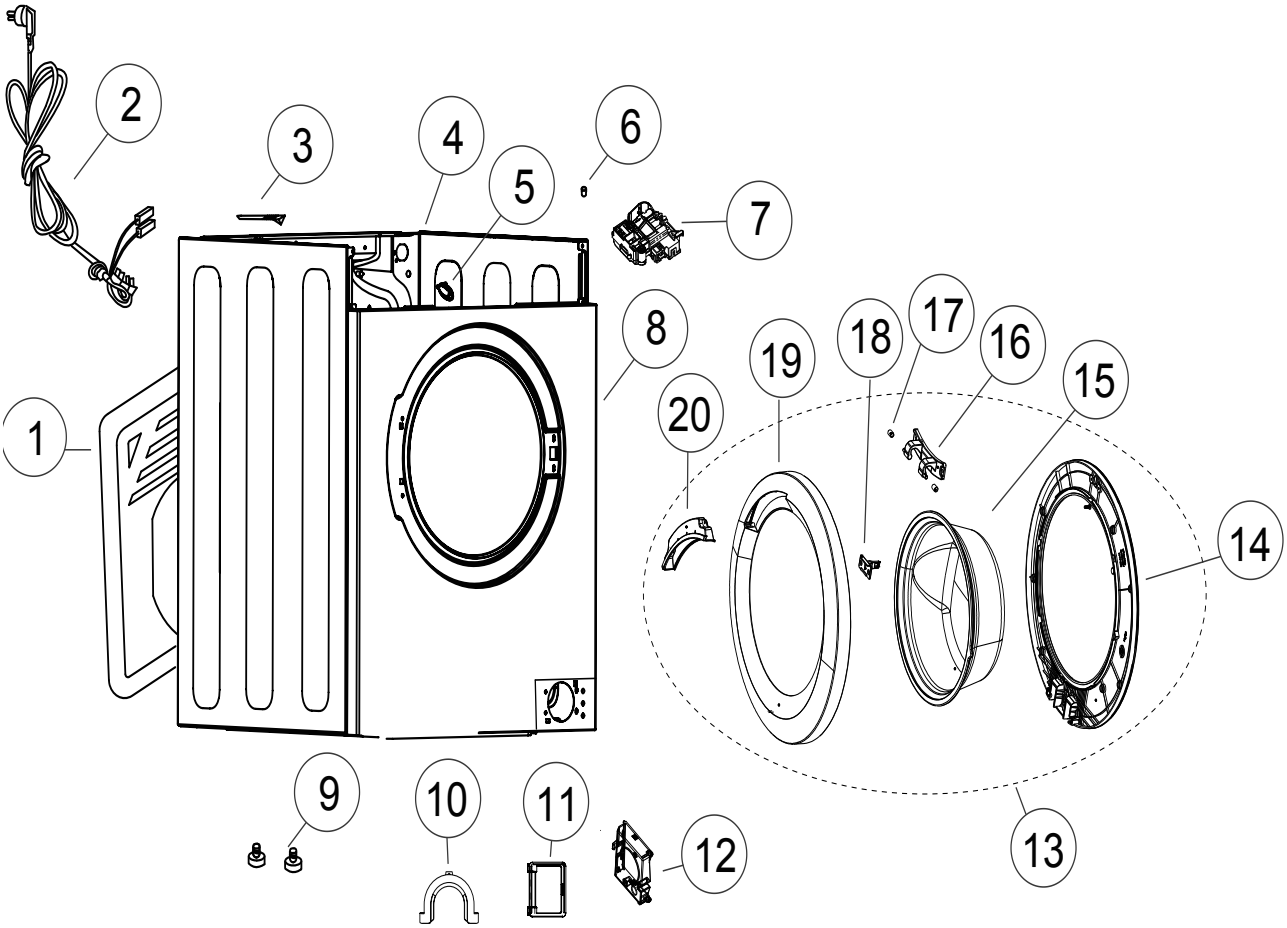

DWG004292

DWG 004292

BOWLS & MOTOR COMPONENTS

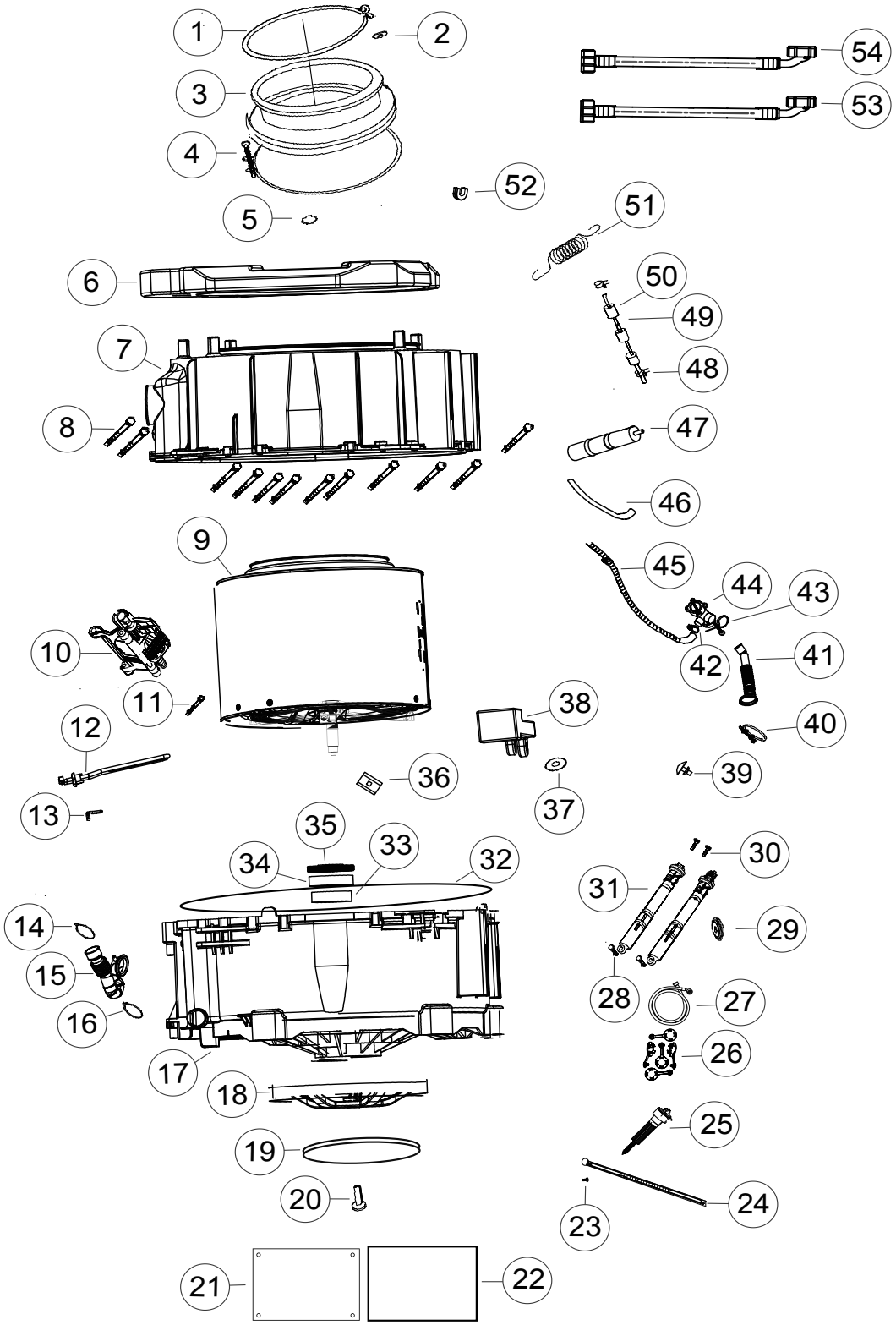

DWG 005231

BOWLS & MOTOR COMPONENTS

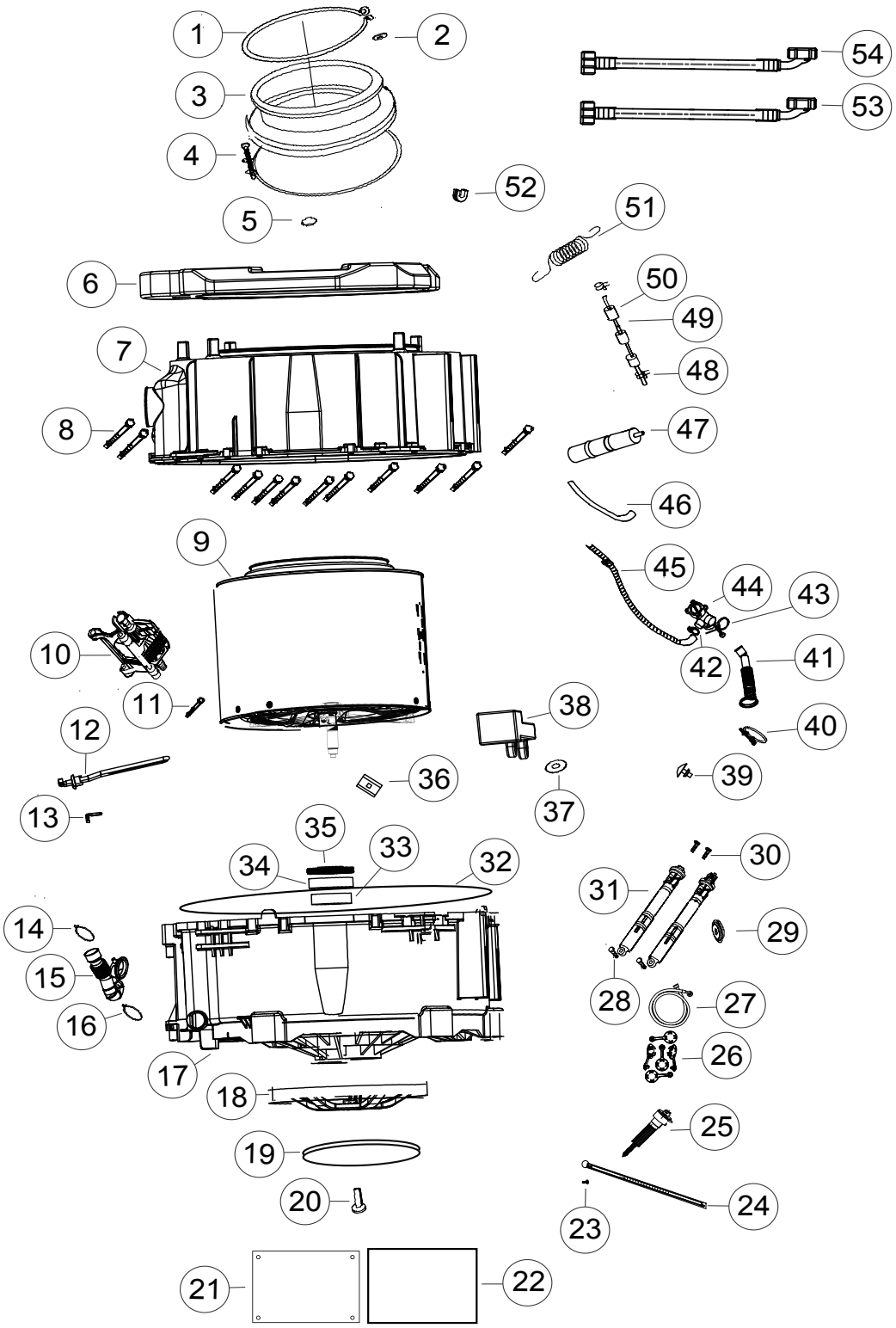

DWG 005231